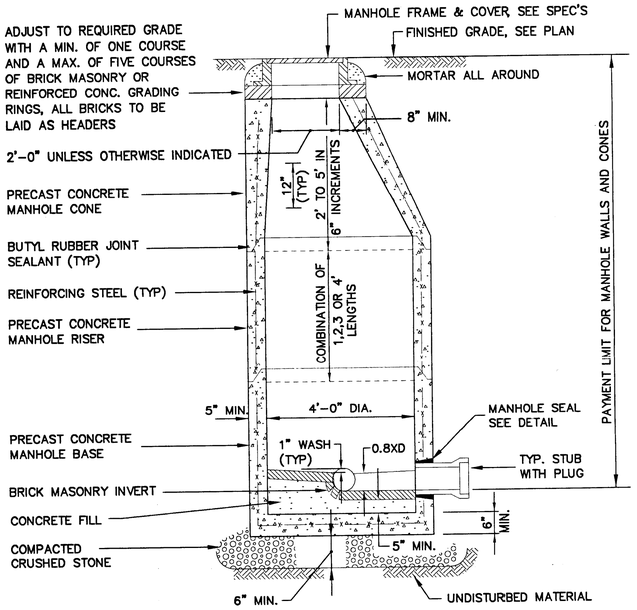

4'-0" DIA. PRECAST CONCRETE STORM DRAIN MANHOLE DETAIL

N.T.S.

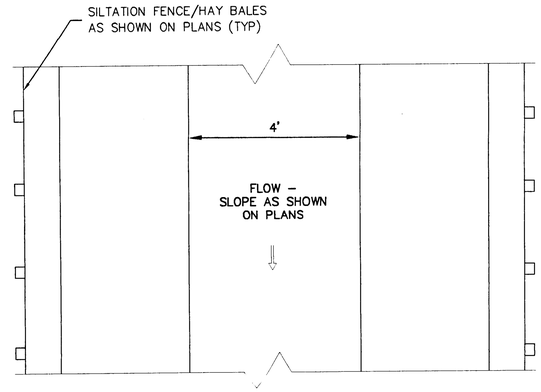

PLAN

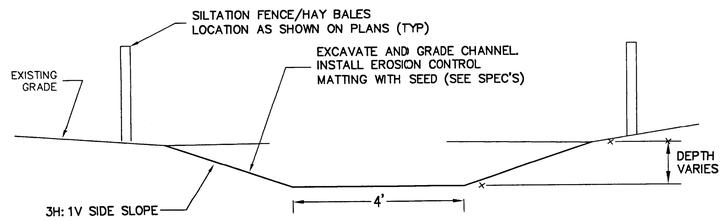

SECTION1

TYPICAL GRASSED CHANNEL DETAIL

N.T.S.

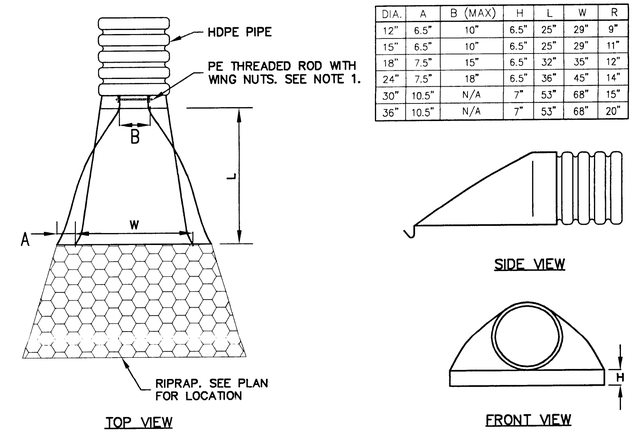

DIA.	A	B (MAX)	H	L	W	R
12"	6.5"	10"	6.5"	25"	29"	9"
15"	6.5"	10"	6.5"	25"	29"	11"
18"	7.5"	15"	6.5"	32"	35"	12"
24"	7.5"	18"	6.5"	36"	45"	14"
30"	10.5"	N/A	7"	53"	68"	15"
36"	10.5"	N/A	7"	53"	68"	20"

SIDE VIEW

TOP VIEW

FRONT VIEW

NOTE:
1. 30" AND 36" END SECTIONS TO BE WELDED OR SECURED TO PIPE PER MANUFACTURER'S RECOMMENDATIONS.

HDPE FLARED END DETAIL

N.T.S.

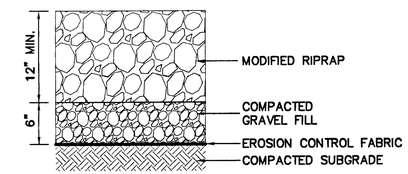

TYPICAL MODIFIED RIPRAP SECTION

N.T.S.

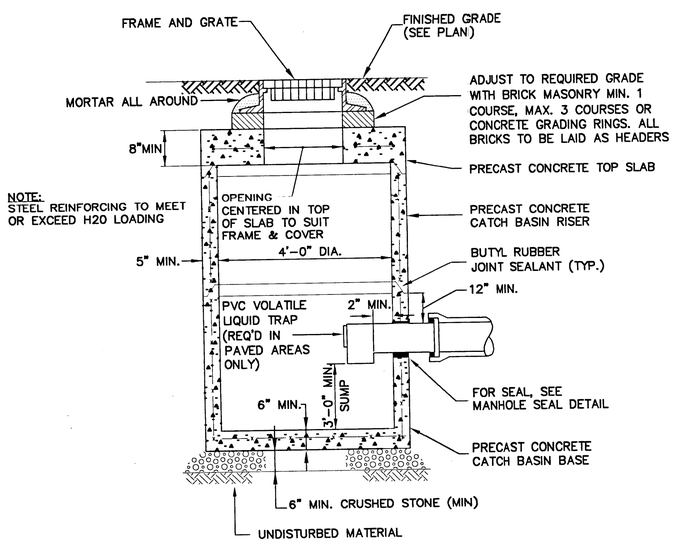

PRECAST CATCH BASIN DETAIL

N.T.S.

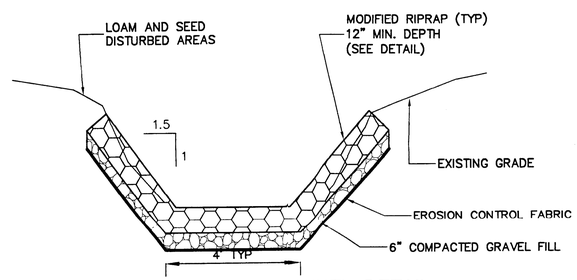

TYPICAL RIPRAP CHANNEL DETAIL

N.T.S.

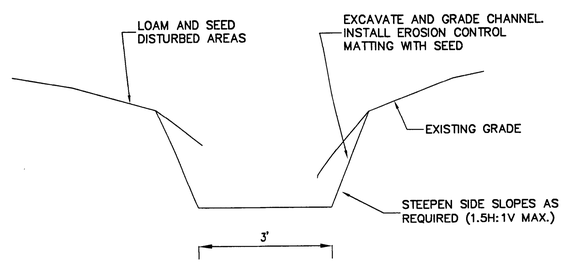

TYPICAL CHANNEL WIDENING DETAIL

N.T.S.

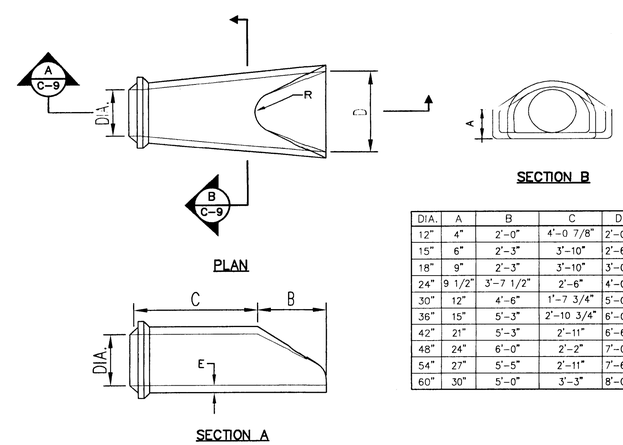

DIA.	A	B	C	D	E	R
12"	4"	2'-0"	4'-0 7/8"	2'-0"	2"	9"
15"	6"	2'-3"	3'-10"	2'-6"	2 1/4"	11"
18"	9"	2'-3"	3'-10"	3'-0"	2 1/2"	12"
24"	9 1/2"	3'-7 1/2"	2'-6"	4'-0"	3"	14"
30"	12"	4'-6"	1'-7 3/4"	5'-0"	3 1/2"	15"
36"	15"	5'-3"	2'-10 3/4"	6'-0"	4"	20"
42"	21"	5'-3"	2'-11"	6'-6"	4 1/2"	22"
48"	24"	6'-0"	2'-2"	7'-0"	5"	22"
54"	27"	5'-5"	2'-11"	7'-6"	5 1/2"	24"
60"	30"	5'-0"	3'-3"	8'-0"	6"	24"

RCP FLARED END DETAILS

N.T.S.

RECORD DRAWING

Weston & Sampson
ENGINEERS, INC.
Five Centennial Drive, Peabody, MA 01960

No.	Date	Dr.By	Ck.By	App.By	Description
1	2/05	WGS	DRL		RECORD DRAWING

REGISTERED PROFESSIONAL ENGINEER — DATE

TOWN OF EAST LONGMEADOW, MASSACHUSETTS
BOARD OF PUBLIC WORKS
REDSTONE DRIVE SEWER AND WATER IMPROVEMENTS AND MISCELLANEOUS DRAINAGE IMPROVEMENT PROJECTS

DETAILS

CADD NO.	SCALE:	CONTRACT:	JOB NO.	DR.BY	DSN.BY	CHK.BY	APP.BY
R-REDSTONE	AS NOTED		201321	WGS	WGS	DRL	PMS

FILE NO. 143-1A

C-9

SHEET 11 OF 11