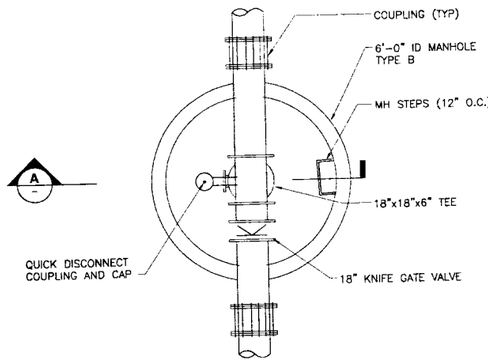

PLAN

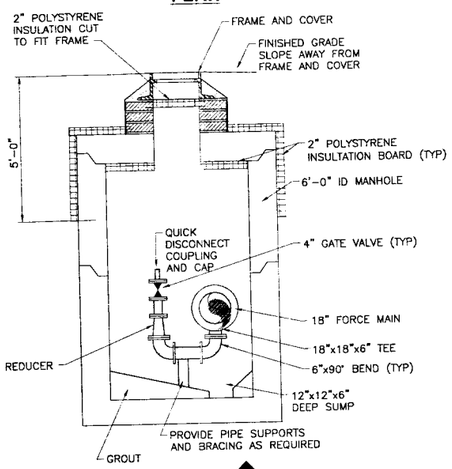

SECTION A

SCALE: NTS

NOTES:

1. INSTALL 18"ø CLASS 53 DIP WITHIN STRUCTURE. TRANSITION 4 FEET OUTSIDE THE STRUCTURE.

2. MANHOLE TO BE WRAPPED WITH FROST BARRIER. SEE SPECIFICATION SECTION 02601 FOR DETAILS.

DRAIN MANHOLE

NTS

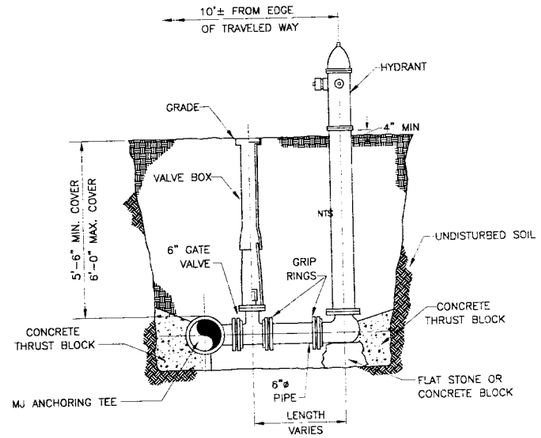

TYPICAL HYDRANT CONNECTION

SCALE: NTS

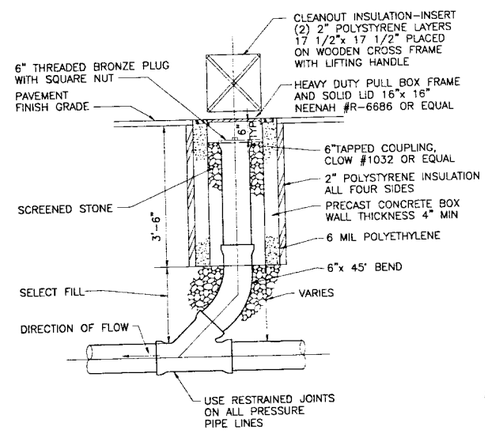

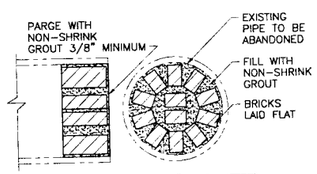

(FOR PIPES UP TO 24" IN DIAMETER)

ABANDONED PIPE PLUG

NTS

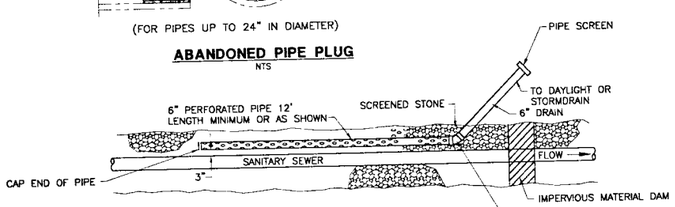

PLAN

NOTES:

1. IF DAYLIGHTING 6" DRAIN, TRANSITION TO 6" CLASS 52 DUCTILE IRON PIPE FOR LAST SECTION.

2. IF CONNECTING DRAIN TO STORM DRAIN MAKE CONNECTION WITH WYE AND COUPLING AS REQUIRED.

3. CONTRACTOR TO COORDINATE THE LOCATION AND INSTALLATION OF BEDDING RELIEF DRAIN IN THE FIELD WITH THE ENGINEER.

SEWER BEDDING RELIEF DRAIN DETAIL

NTS

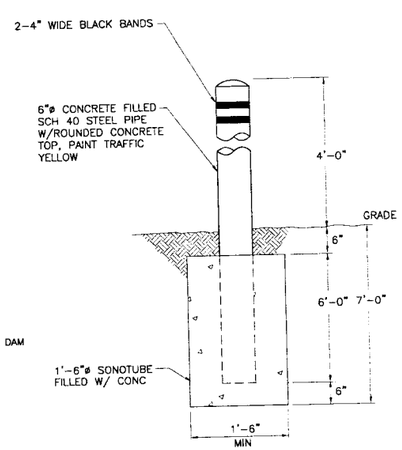

BOLLARD DETAIL

NTS

NOTE:

1. ADDITIONAL UNDERGROUND UTILITIES ARE NOT SHOWN FOR CLARITY. REFER TO DRAWINGS C-8, C-9, C-10, AND C-12 FOR UTILITY INFORMATION.

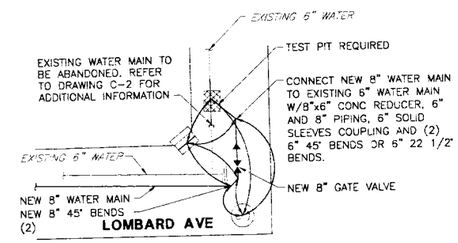

DETAIL #1

SCALE: NTS

NOTE:

1. ADDITIONAL UNDERGROUND UTILITIES ARE NOT SHOWN FOR CLARITY. REFER TO DRAWINGS C-8, C-9, C-10, AND C-12 FOR UTILITY INFORMATION.

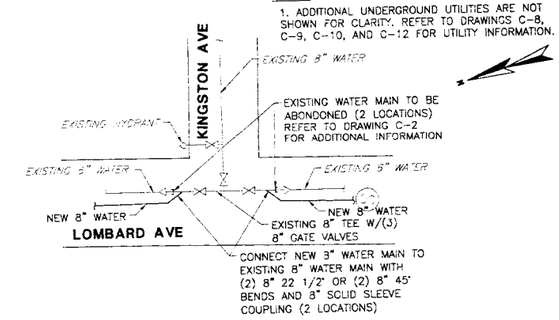

DETAIL #2

SCALE: NTS

NOTE:

1. ADDITIONAL UNDERGROUND UTILITIES ARE NOT SHOWN FOR CLARITY. REFER TO DRAWINGS C-8, C-9, C-10, AND C-12 FOR UTILITY INFORMATION.

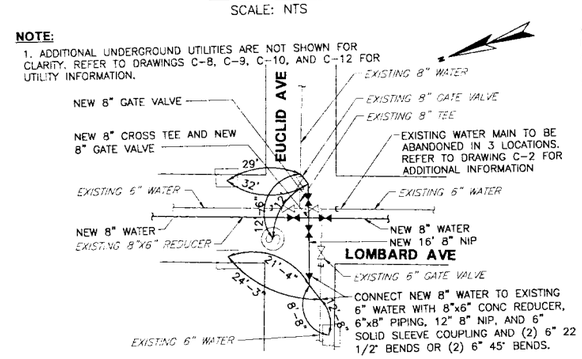

DETAIL #3

SCALE: NTS

NOTE:

1. ADDITIONAL UNDERGROUND UTILITIES ARE NOT SHOWN FOR CLARITY. REFER TO DRAWINGS C-8, C-9, C-10, AND C-12 FOR UTILITY INFORMATION.

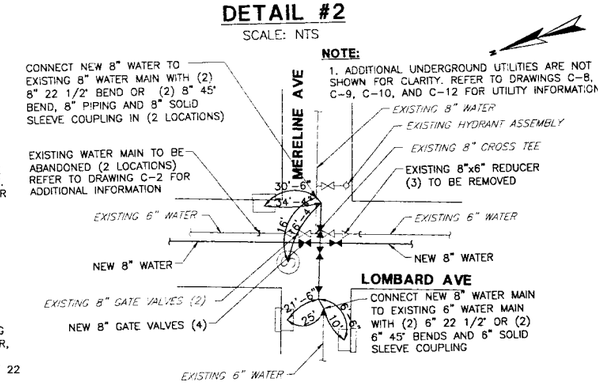

DETAIL #4

SCALE: NTS

NOTE:

1. ADDITIONAL UNDERGROUND UTILITIES ARE NOT SHOWN FOR CLARITY. REFER TO DRAWINGS C-8, C-9, C-10, AND C-12 FOR UTILITY INFORMATION.

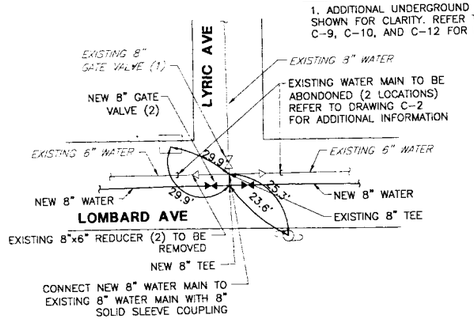

DETAIL #5

SCALE: NTS

NOTE:

1. ADDITIONAL UNDERGROUND UTILITIES ARE NOT SHOWN FOR CLARITY. REFER TO DRAWINGS C-8, C-9, C-10, AND C-12 FOR UTILITY INFORMATION.

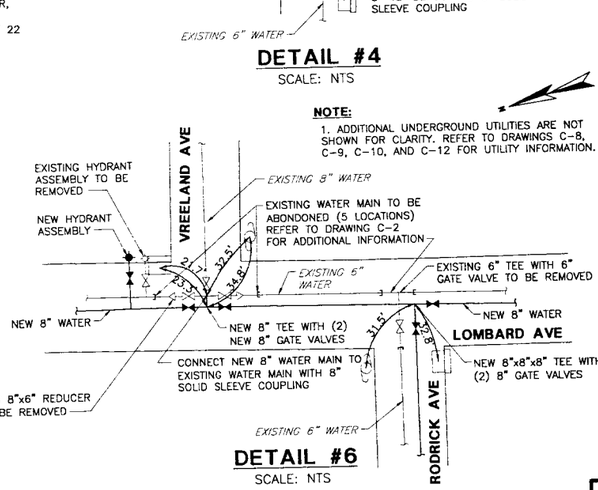

DETAIL #6

SCALE: NTS

NOTE:

1. ADDITIONAL UNDERGROUND UTILITIES ARE NOT SHOWN FOR CLARITY. REFER TO DRAWINGS C-8, C-9, C-10, AND C-12 FOR UTILITY INFORMATION.

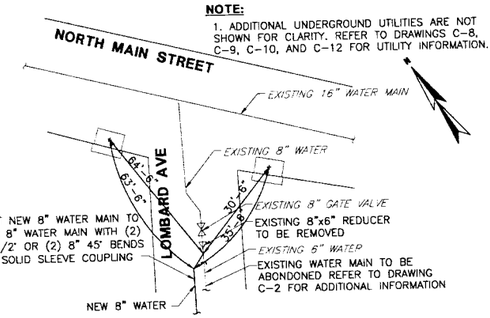

DETAIL #7

SCALE: NTS

NOTE:

1. ADDITIONAL UNDERGROUND UTILITIES ARE NOT SHOWN FOR CLARITY. REFER TO DRAWINGS C-8, C-9, C-10, AND C-12 FOR UTILITY INFORMATION.

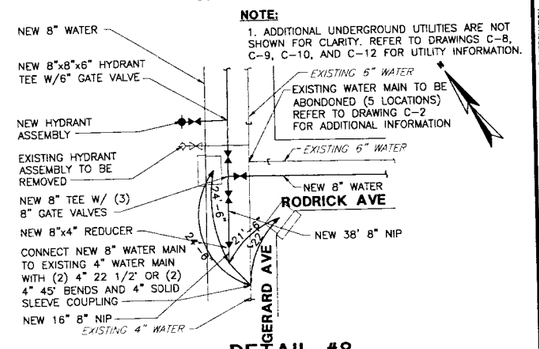

DETAIL #8

SCALE: NTS

NO	REVISIONS	BY	DATE
1	RECORD DRAWINGS 12/04		
2			
3			
4			
5			

PROGRESS PRINTS	
ISSUED FOR REVIEW:	12-02
ISSUED FOR BIDDING:	2-03
VALVE LOCATIONS	
AS-BUILTED ON	
FILEMAKE	

DRAWN BY	SJM
CHECKED BY	SGH
DATE	12-18-02
APPROVED BY	SGH
DATE	1-31-03
BOOK NO.	
PROJECT NO.	7051K
SCALE	AS NOTED

Wright-Pierce
189 Main Street 700 Plaza Middlesex
Middletown, Connecticut USA 06457
TEL (860) 343-8297 FAX (860) 343-9504

THESE RECORD DRAWINGS HAVE BEEN PREPARED, IN PART, ON THE BASIS OF THE INFORMATION COMPILED AND FURNISHED BY OTHERS. WRIGHT-PIERCE WILL NOT BE RESPONSIBLE FOR ANY ERRORS OR OMISSIONS WHICH MAY HAVE BEEN INCORPORATED INTO THIS DOCUMENT AS A RESULT.

DEPARTMENT OF PUBLIC WORKS
TOWN OF EAST LONGMEADOW, MA
VINELAND AVENUE PUMP STATION
CONTRACTS NO. 1 AND NO. 2

DETAILS III

DWG C-16

16 OF 49

G:\dwgs\7051K\Record Dwgs\CIV\7051KC16.dwg, 1/7/2005 2:41:58 PM, cjb