FOOTING SCHEDULE

TYPE	FL	FW	FT	FR
A	4'-0"	4'-0"	1'-0"	#5 @ 12" T&B EW

* SEE FOOTING DETAIL, THIS DRAWING.

FL = FOOTING LENGTH
FW = FOOTING WIDTH
FT = FOOTING THICKNESS
FR = FOOTING REINFORCING

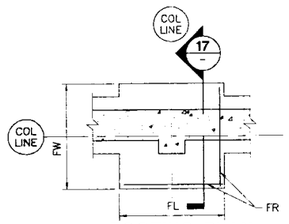

FOOTING PLAN
SCALE: NTS

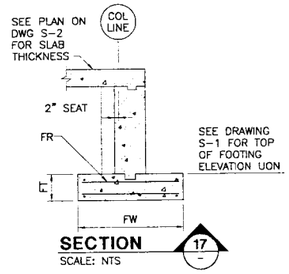

SECTION 17
SCALE: NTS

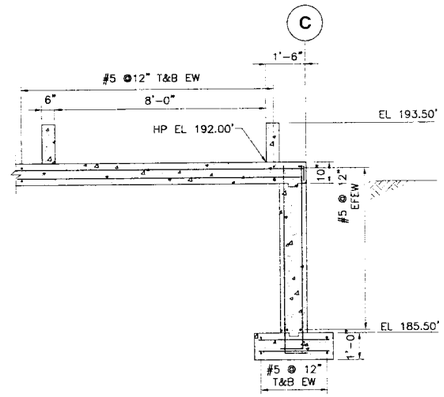

SECTION 12 S-1 S-2
SCALE: 3/8"=1'-0"

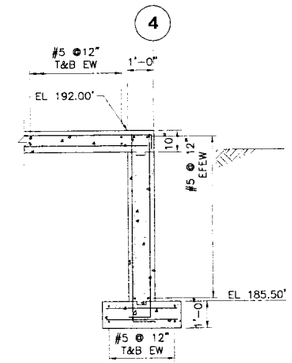

SECTION 13 S-1 S-2
SCALE: 3/8"=1'-0"

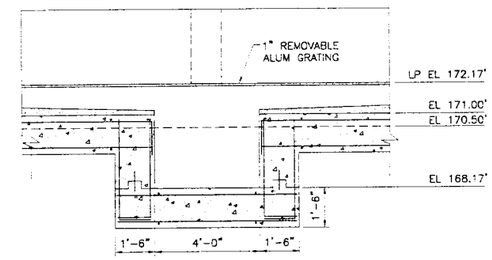

SECTION 15 S-1
SCALE: 3/8"=1'-0"

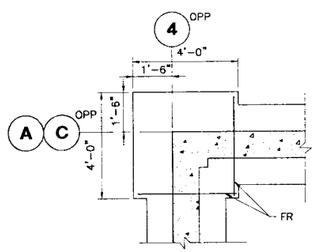

FOOTING TYPE A
SCALE: 3/8"=1'-0"

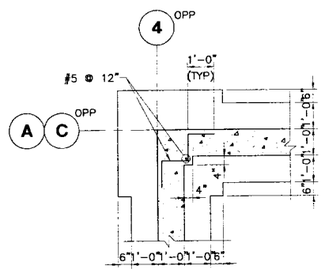

PILASTER TYPE 1
SCALE: 3/8"=1'-0"

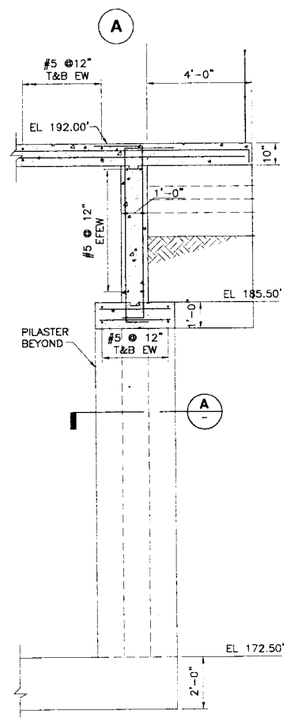

SECTION 14 S-1 S-2
SCALE: 3/8"=1'-0"

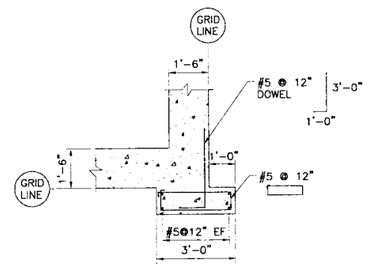

DETAIL A
SCALE: 3/8"=1'-0" S-1, S-3

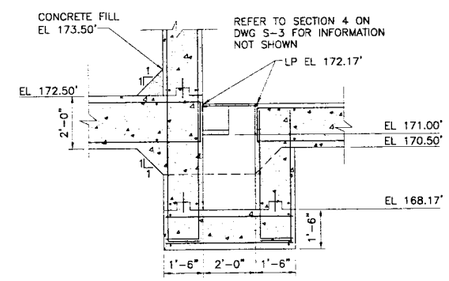

SECTION 16 S-1
SCALE: 3/8"=1'-0"

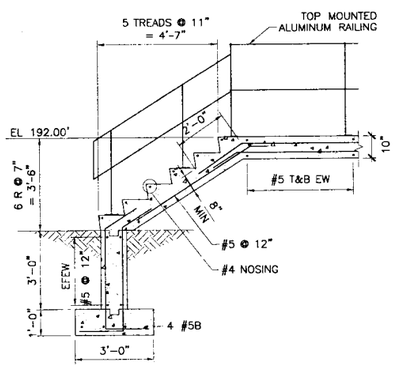

SECTION 18 S-1 S-2
SCALE: 3/8" = 1'-0"

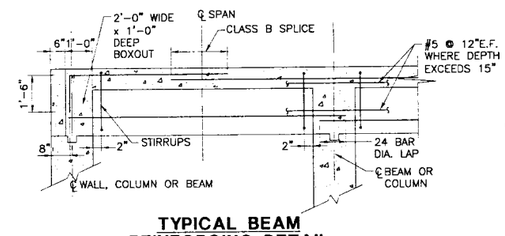

TYPICAL BEAM REINFORCING DETAIL
NTS

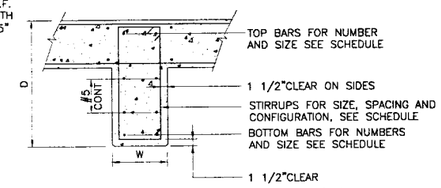

TYPICAL FLOOR BEAM SECTION
NTS

BOTTOM OF COLUMN BASE PLATES SCHEDULE

COLUMN	ELEVATION (ASSUMING 1 1/2" GROUT)
C-2 A-3, C-3 A-4, C-4 A-2	EL 192.13'

HATCH SCHEDULE
REFER TO SPECIFICATION 08305

MARK	OPENING SIZE	SAFETY POST	SAFETY NETTING	REMARKS
A	3'-6" x 4'-0"	NO	YES	DOUBLE LEAF/300 PSF LIVE LOAD
B	2'-6" x 3'-0"	NO	NO	300 PSF LIVE LOAD

HVAC SCHEDULE

MARK	OPENING SIZE*	FIRE DAMPER REQUIRED
A	15" x15"	YES
B	15" x15"	YES

* GENERAL CONTRACTOR SHALL COORDINATE OPENING SIZE REQUIRED WITH HVAC FILE SUBBIDDER.

BEAM SCHEDULE

MARK	SIZE WxD	REINFORCING ℄ SUPPORT	STIRRUPS SIZE	STIRRUPS TYPE	STIRRUPS SPACING	REMARKS
BM-1	24x32*	4#9 6#10	#4		1@2", 1@10"EE BAL@12"	* NOMINAL DIMENSION
BM-2	12x18	2#5 2#6	#4		1@2", BAL@7"	——

NOTES:
1. FOR GENERAL STRUCTURAL NOTES AND STANDARD DETAILS, SEE DRAWINGS S-6 AND S-7.

NO	REVISIONS	APP'D	DATE
1	RECORD DRAWINGS 12/04		
2			
3			
4			
5			

PROGRESS PRINTS
ISSUED FOR REVIEW: 12-02
ISSUED FOR BIDDING: 2-03
AS-BUILT TOBERON
LAST REVISED ON:
FILENAME

DRAWN BY CJB
CHECKED BY JJP/WJF
DATE 12-13-02
APPROVED BY WJF
DATE 12-20-02
BOOK NO. —
PROJECT NO. 7051K
SCALE AS NOTED

Wright-Pierce
169 Main Street 700 Plaza Middlesex
Middletown, Connecticut USA 06457
TEL (860) 343-8297 FAX (860) 343-9504

THESE RECORD DRAWINGS HAVE BEEN PREPARED, IN PART, ON THE BASIS OF THE INFORMATION COMPILED AND FURNISHED BY OTHERS. THE ENGINEER WILL NOT BE RESPONSIBLE FOR ANY ERRORS OR OMISSIONS WHICH HAVE BEEN INCORPORATED INTO THIS DOCUMENT AS A RESULT.

DEPARTMENT OF PUBLIC WORKS
TOWN OF EAST LONGMEADOW, MA
VINELAND AVENUE PUMP STATION
CONTRACTS NO. 1 AND NO. 2

SCHEDULES, DETAILS AND SECTIONS III

DWG S-5
27 OF 49

G:\dwgs\7051K\Record Dwgs\STR\7051KS05.dwg, 1/7/2005 3:21:24 PM, cjb