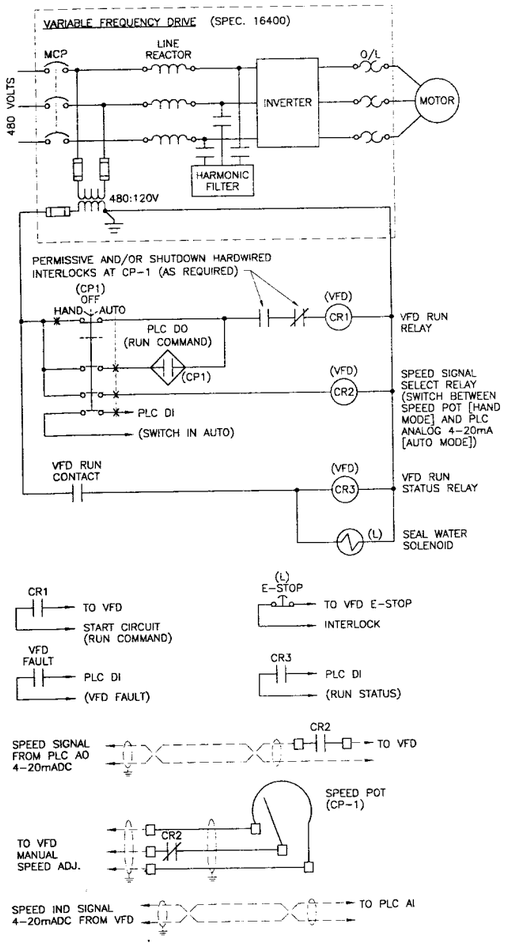


**TYPICAL SCHEMATIC DIAGRAM**
**WETWELL PUMPS IP-1, IP-2, & IP-3**

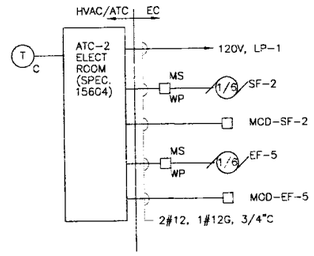


**ELECTRICAL ROOM**

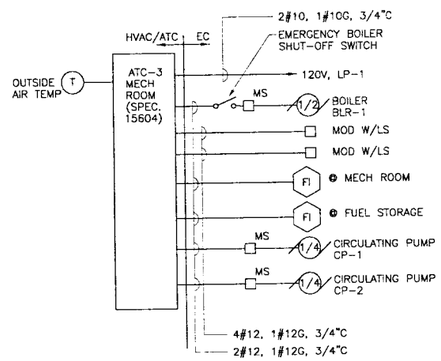


**MECH ROOM**

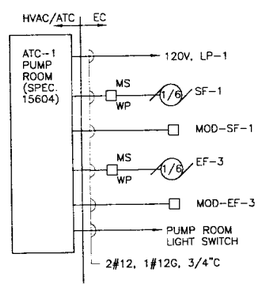


**PUMP ROOM**

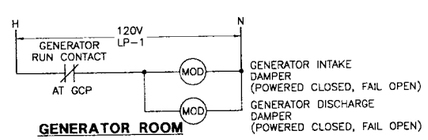


**GENERATOR ROOM**

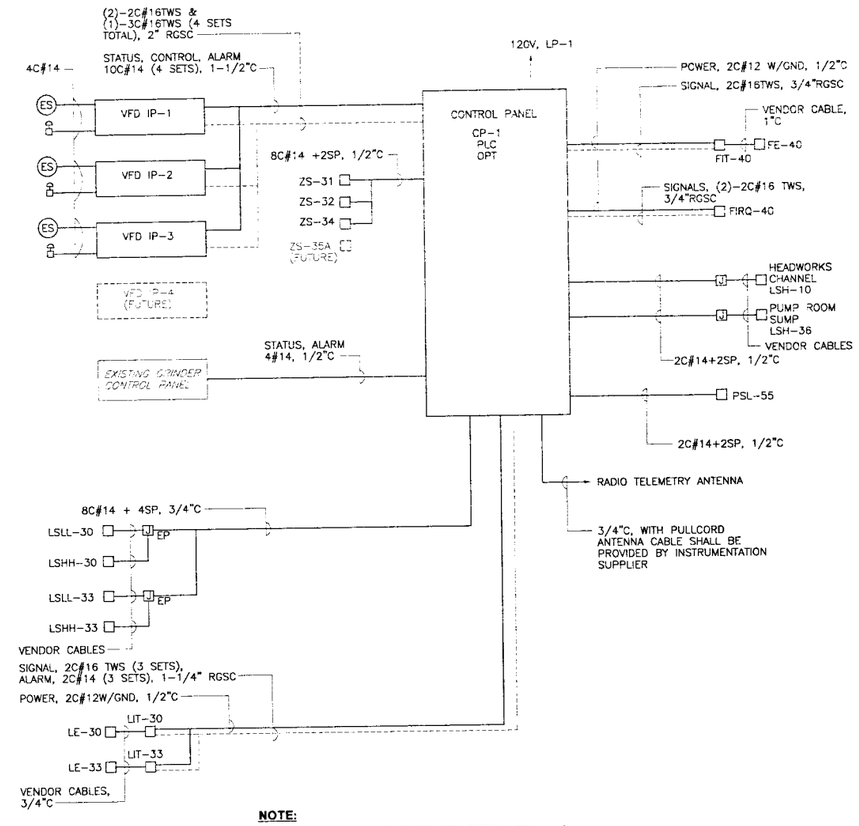


**NOTE:**
REFER TO DRAWING E-3 FOR CONNECTIONS TO ATS-1 AND EMERGENCY GENERATOR.

**INSTRUMENTATION/CONTROL WIRING DIAGRAM**
NTS

**SCHEMATIC LEGEND:**
(L) – LOCAL AT EQUIPMENT
(MCC) – MOTOR CONTROL CENTER
(VFD) – VARIABLE FREQUENCY DRIVE
(CP1) – CONTROL PANEL
(PLC) – PROGRAMMABLE LOGIC CONTROLLER AT CP-1
(ATC) – AUTOMATIC TEMPERATURE CONTROL

| NO | REVISIONS | APP'D | DATE |
|---|---|---|---|
| 1 | RECORD DRAWINGS, 12/04 | | |
| 2 | | | |
| 3 | | | |
| 4 | | | |
| 5 | | | |

PROGRESS PRINTS
ISSUED FOR REVIEW 12-02
ISSUED FOR BIDDING 2-03
VAULT LOCATION:
LAST MODIFIED ON:
FILENAME:

DRAWN BY SLM
CHECKED BY DWL
DATE 12-13-02
APPROVED BY DWL
DATE 12-20-02
BOOK NO.
PROJECT NO. 7051K
SCALE AS NOTED

Wright-Pierce
169 Main Street 700 Plaza Middlesex
Middletown, Connecticut USA 06457
TEL (860) 343-8297 FAX (860) 343-9504

THESE RECORD DRAWINGS HAVE BEEN PREPARED, IN PART, ON THE BASIS OF THE INFORMATION COMPILED AND FURNISHED BY OTHERS. THE ENGINEER WILL NOT BE RESPONSIBLE FOR ANY ERRORS OR OMISSIONS WHICH HAVE BEEN INCORPORATED INTO THIS DOCUMENT AS A RESULT.

DEPARTMENT OF PUBLIC WORKS
TOWN OF EAST LONGMEADOW, MA
VINELAND AVENUE PUMP STATION
CONTRACTS NO. 1 AND NO. 2

CONTROL AND INSTRUMENTATION DIAGRAMS

DWG E-7



G:\dwgs\7051K\Record Dwgs\ELE\7051Ke07.dwg, 1/7/2005 3:36:39 PM, cjb