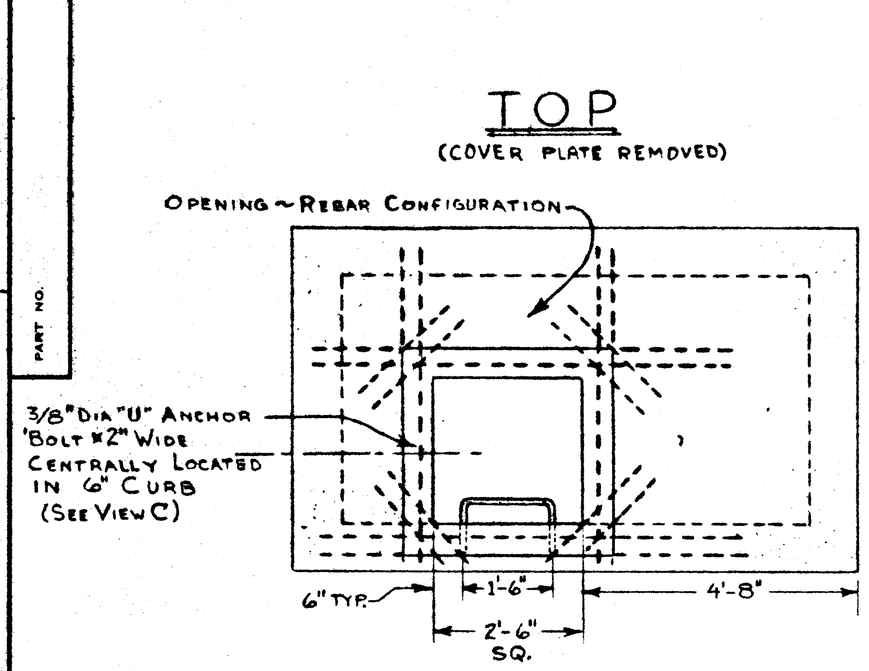

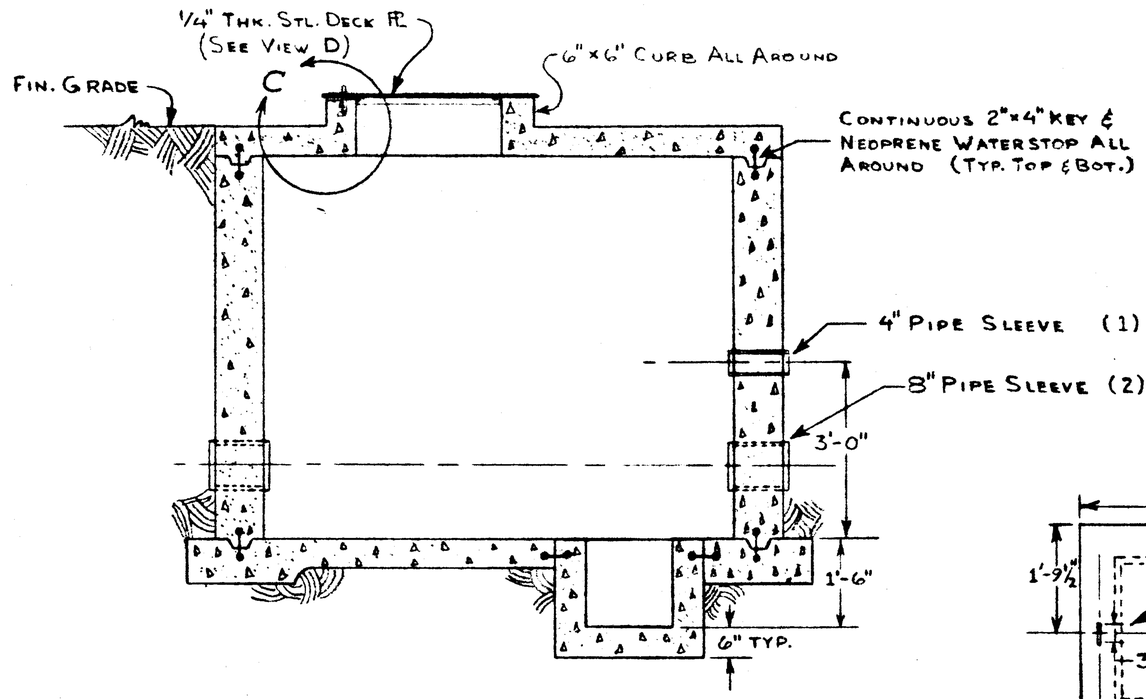

SECTION B B

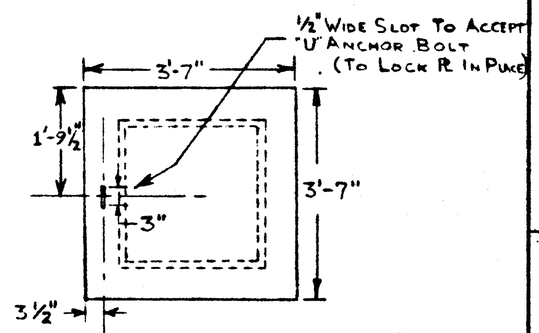

VIEW D

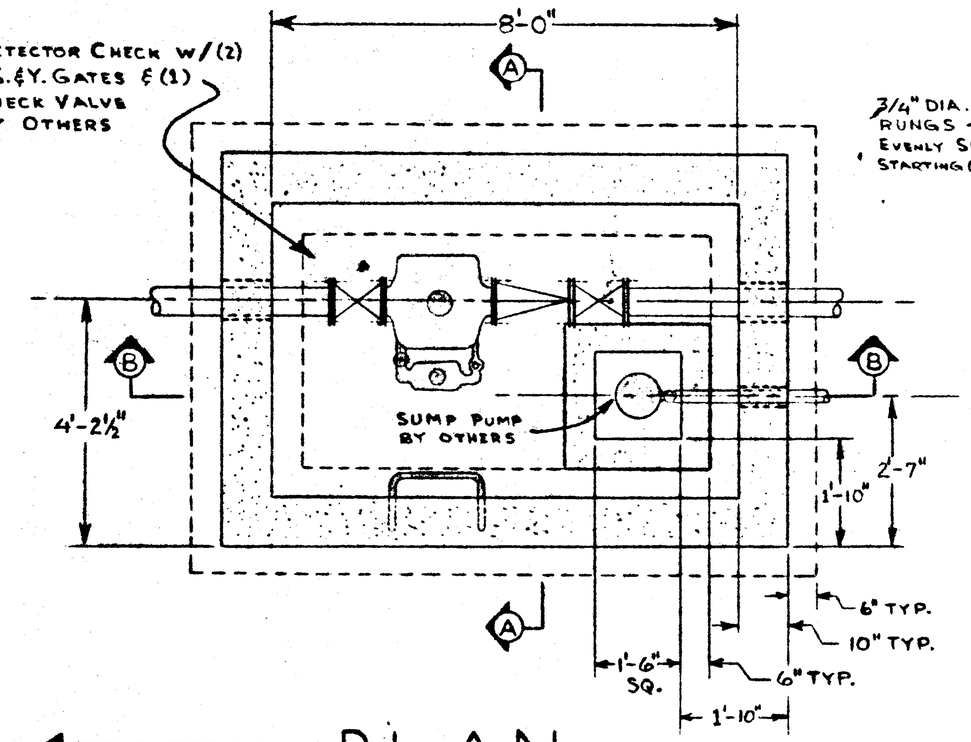

NORTH

PLAN

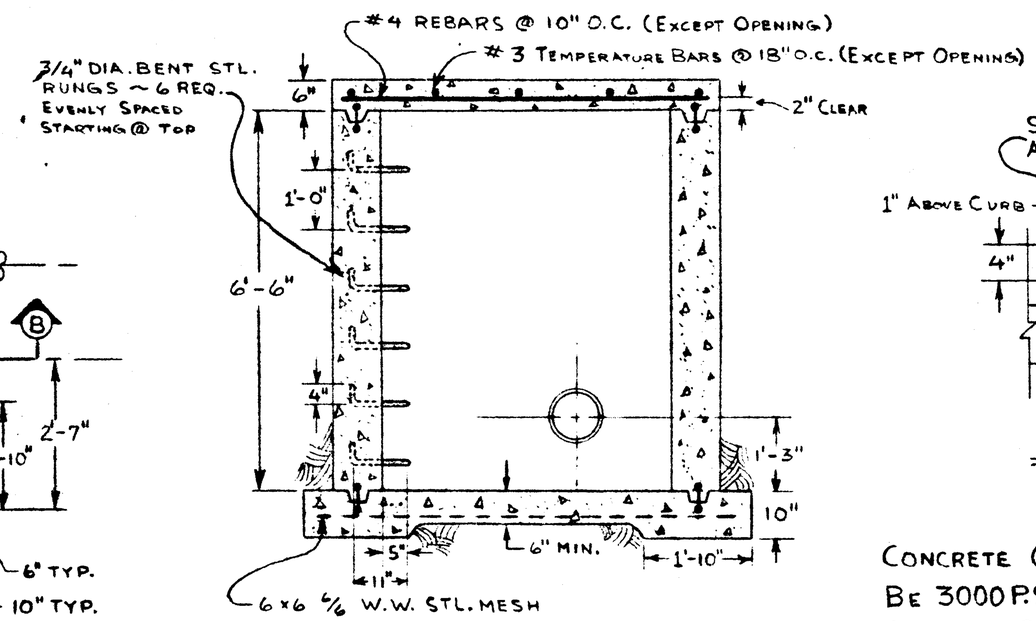

SECTION A A

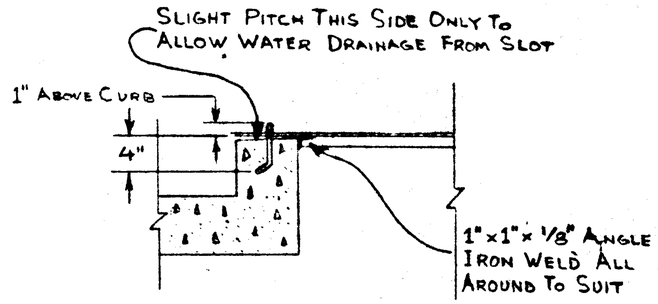

VIEW C

CONCRETE COMPRESSIVE STRENGTH SHALL BE 3000 P.S.I. IN 28 DAY CURING PERIOD

SEE PARTIAL SITE PLAN SHEET 2 OF 10 FOR PIT LOCATION

TOLERANCE UNLESS OTHERWISE SPECIFIED
2 PLACE DEC. ± .015
3 PLACE DEC. ± .005
4 PLACE DEC. TOL. SHALL EXPRESS THE DEGREE OF PRECISION REQUIRED
ANGULAR ± 1/2°

NOTICE

This drawing, and the subject-matter disclosed therein, embody proprietary information which is the confidential property of Package Machinery Company, none of which shall be copied, reproduced, disclosed to others, published, or used, in whole or in part, for any purpose, without the express advance written permission of a duly authorized agent of the Company. This drawing is subject to recall by Package Machinery Company at any time.

FOR ENG. USE ONLY	OPERATION	TOOL LIST	REVISIONS
			6
			5
			4
			3
			2
			1

MATERIAL	DATE 5-6-71
SIZE-PATTERN-FORGING	SCALE 1/2" = 1'-0"
MACHINE TYPES	DRAWN B.R.G.
SUPERSEDES NO. / SUPERSEDED BY	CHECKED

PACKAGE MACHINERY COMPANY AND REED - PRENTICE DIV.
EAST LONGMEADOW, MASS

PART NAME: SECOND WATER SUPPLY~FIRE PROTECTION

PART NO.: VALVE & METER PIT SHEET 2A OF 10